Rev. 3

OXYGEN

Just like breathing



INSTALLATION, OPERATION AND MAINTENANCE MANUAL

HRV: OXYGEN Easy 150, 200, 250
ERV: OXYGEN Easy 150E, 200E, 250E

Users download
OXYGEN Easy app

Download on the App Store

GET IT ON Google Play

oxygen.lt

1. Contents

2. Introduction 4

3. Safety message and informational symbols 4

3.1. General Safety Instructions 5

3.2. General installation, maintenance, and control safety precautions 5

4. Intended Use, Operating, and Storage Conditions 6

4.1. Intended use and environmental requirements 6

4.2. Transportation, Storage, and Unpacking 6

4.3. Shipment inspection 7

4.4. Package contents 8

5. Device dimensions and orientation 9

5.1. Dimensions 9

5.2. Orientation 10

6. Installation of the unit 11

6.1. Installation Procedure 11

6.2. Installation of Ducts and Outdoor Grilles 12

6.2.1. Condensate management and duct slopes 12

6.2.2. Duct Insulation and Airtightness 13

6.2.3. Air Intake and Exhaust Vents 13

6.3. Condensate drainage and siphon connection 15

6.3.1. When is drainage required? 15

6.3.2. Requirements for Installing the Drainage System 15

6.3.3. Maintenance 16

7. Maintenance and service area 17

8. Balancing the Ventilation System 19

9. Electrical Connection 20

9.1. Electrical installation requirements 20

9.2. Connecting the device to the network 20

9.3. Emergency disconnection and maintenance 20

10. Technical specifications of the controller and remote control 22

11. Electrical wiring diagram 23

11.1. Contact tracing 24

11.2. Preparing cables for connection to contacts 25
12. Replacing Fuses 26
12.1. Main fuse F1: 26
12.2. Additional F2 fuse: 26
13. Selecting the device control panel cable and installing the panel 27
14. DIN Comfort Connector 29
14.1. Digital input contacts in C series models 29
15. Startup, Inspection, and Operation of the Unit 31
15.1. Easy Control Panel 33
15.2. OXYGEN Easy app 34
15.3. Upgrading to LCD SimpleTouch control panel 35
16. Unit Maintenance 36
16.1. Filter Replacement 36
16.1.1. Resetting the Filter Timer Using the Control Panel 36
16.1.2. Resetting the filter timer using the OXYGEN Easy app 36
16.1.3. Filter classes: 37
16.2. Heat Exchanger Cleaning 37
17. Quality Assurance 38
18. Technical specification according to "ECODESIGN" (ERP), NO. 1254/2014 39
19. Declaration of Conformity 40

2. Introduction

Please read this manual carefully to ensure the safe and proper installation, startup, and operation of the ventilation unit. Before beginning any work, you must familiarize yourself with all requirements and safety instructions provided in this document.

Strictly follow the installation instructions, this is essential not only for the smooth operation of the unit but also for the validity of the warranty. The manufacturer assumes no liability for equipment malfunctions or property damage resulting from improper installation, misuse, or failure to comply with the requirements of this manual.

Keep this document for future reference. Ensure that the manual is always available to users of the unit and to service technicians who maintain the system.

3. Safety message and informational symbols

	**Danger!** Ignoring warnings marked with this symbol may cause serious injuries or even death.

	**Caution!** Ignoring warnings marked with this symbol may damage the device or other nearby objects and surroundings.

	Important Information Recommendations

	Recycling symbol

3.1. General Safety Instructions



Using controls or making adjustments not described in this documentation may result in electric shock or other hazards caused by electrical voltage or current and/or may damage other components of the unit. Danger to life due to electric shock! To ensure your safety, you must follow all instructions provided in this manual. Incorrect installation and/or improper startup can result in serious injury.

3.2. General installation, maintenance, and control safety precautions



- Installation, maintenance, and cleaning work may only be performed by qualified specialists.
- Before performing any installation, maintenance, servicing, or electrical work, make sure the unit is disconnected from the power supply. Unplug the unit from the power outlet or, if this is not possible, turn off the circuit breaker. Make sure that unauthorized persons do not turn the unit back on.
- All work related to electrical installations must be performed by a qualified electrician, as there is a risk of death from electric shock.
- Take measures to prevent unauthorized persons from entering the work area, as a tool or component that falls accidentally could injure them.
- The installer must select the unit's fasteners (screws, anchors, etc.) based on the building's structural material and load-bearing capacity. The installer is responsible for securely fastening the unit to the building structure.
- The power cord must be routed so that no one trips over it or pulls it out of the outlet.
- Never use the unit if the power cord is damaged. If you notice such a defect, turn off the circuit breaker to disconnect the power supply from the unit and immediately contact a qualified technician or the manufacturer's service center.
- The unit may be operated by children 8 years of age and older, as well as by persons with disabilities or those without experience or knowledge, provided they are supervised or have been instructed on how to use the unit safely and understand the associated risks. Children must not play with the unit. Children must not perform cleaning or other maintenance tasks on the unit without supervision.

4. Intended Use, Operating, and Storage Conditions

4.1. Intended use and environmental requirements

The unit is designed and manufactured for the ventilation of residential and office spaces (restrictions apply in industrial areas).

- **Operating environment:** The unit must be installed in a room where the ambient air temperature ranges from +10 °C to +35 °C and the relative humidity does not exceed 65% (non-condensing).
- **Conditions in the rooms being ventilated (exhaust air):** Normal relative humidity in the rooms from which air is extracted should not exceed 65%.
- **Frost protection:** All “Easy” series units are equipped with an integrated heating element that protects the counterflow heat exchanger from icing and ensures uninterrupted ventilation at low outdoor temperatures.



- **Restrictions:** The unit is not intended for use in aggressive environments (e.g., swimming pools, saunas, chemical industry facilities).

IMPORTANT: EXHAUST AIR HUMIDITY AND ENTHALPY HEAT EXCHANGERS

If the constant relative humidity in ventilated rooms is elevated and exceeds 65% (e.g., in newly constructed buildings, while wall finishes, plaster, or concrete are drying), excess moisture will inevitably condense inside the unit.

If your unit is equipped with an enthalpy (moisture-recovery) heat exchanger that does not include a standard condensate drain, extracting such humid air is strictly prohibited unless a condensate drain with a dry trap has been additionally installed on the unit. Without a drain, the unit may only be operated once the humidity in the room has naturally dropped to a safe level. If accumulated condensate floods the unit and damages the electronics due to failure to comply with this requirement, the manufacturer’s warranty will not apply.

4.2. Transportation, Storage, and Unpacking

The unit is delivered in secure cardboard packaging that protects it from environmental dust. During both storage and transportation, the unit must be protected from physical damage, impacts, or falls.

- **Transportation conditions:** Permissible ambient temperature ranges from -20 °C to +40 °C.
- **Long-term storage conditions:** The room temperature must be between +5 °C and +40 °C. The recommended relative humidity is 40–60% (maximum permissible limit is 70%).



- **Unpacking:** After unpacking the unit, please sort all packaging materials and dispose of them in an environmentally friendly manner.

4.3. Shipment inspection

Carefully inspect the shipment you received. If you notice that the packaging is damaged or the serial number of the delivered unit does not match the one on the invoice, contact your supplier immediately.

Decoding the identification label:



- SN – serial number
- Product – product information:
  - EASY – model
  - C – ceiling model
  - 250 – maximum flow rate
  - E – enthalpy heat exchanger (if "E" is omitted, the unit has a standard heat exchanger)
  - V2 – product version
  - CO2 – unit with CO2 sensor
- Version – mounting side



- Open book symbol: You must read the instructions. Before beginning any installation, operation, or maintenance work on the unit, you must carefully read and understand the entire user manual. You must keep these instructions for the entire service life of the unit. If this requirement is not followed, the manufacturer assumes no liability for any resulting damage



- Exclamation point in an equilateral triangle: Caution / Important instructions. This symbol in the technical documentation indicates particularly important operating, maintenance, and safety instructions. Strict compliance with these instructions is required. Failure to follow them may result in equipment damage, property loss, or serious injury to personnel.



- Lightning symbol in an equilateral triangle: Risk of electric shock / Dangerous voltage. This symbol warns of uninsulated dangerous voltage inside the unit housing, at a level sufficient to cause serious or fatal electric shock. The user is strictly prohibited from disassembling or opening the unit's housing. All repair and maintenance work may only be performed by certified and qualified service technicians.

- Crossed-out trash can: Disposal of Waste Electrical and Electronic Equipment (WEEE). This symbol indicates that the product must not be disposed of with unsorted municipal waste. In accordance with local and international laws, at the end of its useful life, the equipment must be taken to specialized collection or recycling centers for electrical and electronic waste. Illegal disposal of waste results in legal liability.
- CE Marking: Declaration of Conformity. This mark confirms that the product is certified and fully complies with the essential requirements of European Union directives governing worker health, consumer safety, and environmental protection. The product is legally marketed in the European Economic Area.

4.4. Package contents

Table 1 Package contents

	Device. Check identification label	1 pc.
	Brackets for attaching the device to the ceiling	4 pcs.
	Screws M5x12 (DIN 7985) for attaching brackets to the device	8 pcs.
	Drainage pipe ⌀32mm with rubber "O" shaped sealing gasket (only for C150, C200, and C250 devices)	1 pc.
	Instruction	1 pc.
	LIYY data cable	10 meters.

5. Device dimensions and orientation

5.1. Dimensions

Left-side configuration

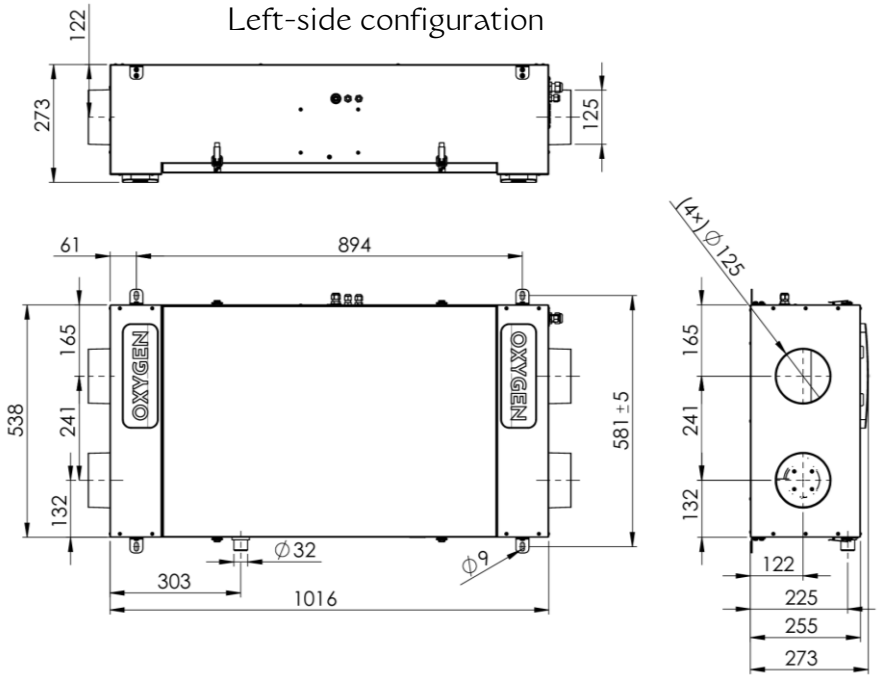

Right-side configuration

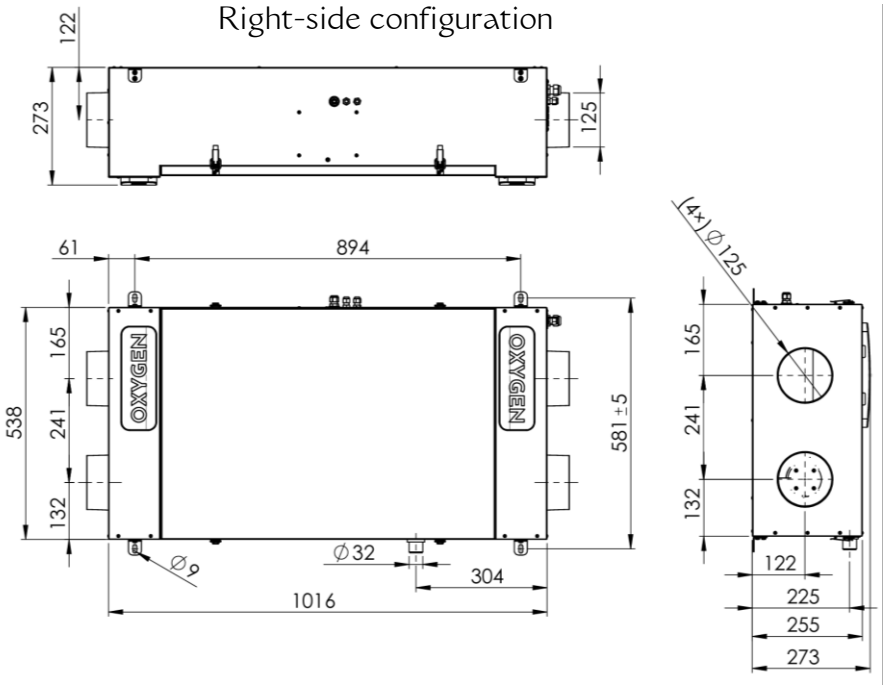

5.2. Orientation

Left-side configuration

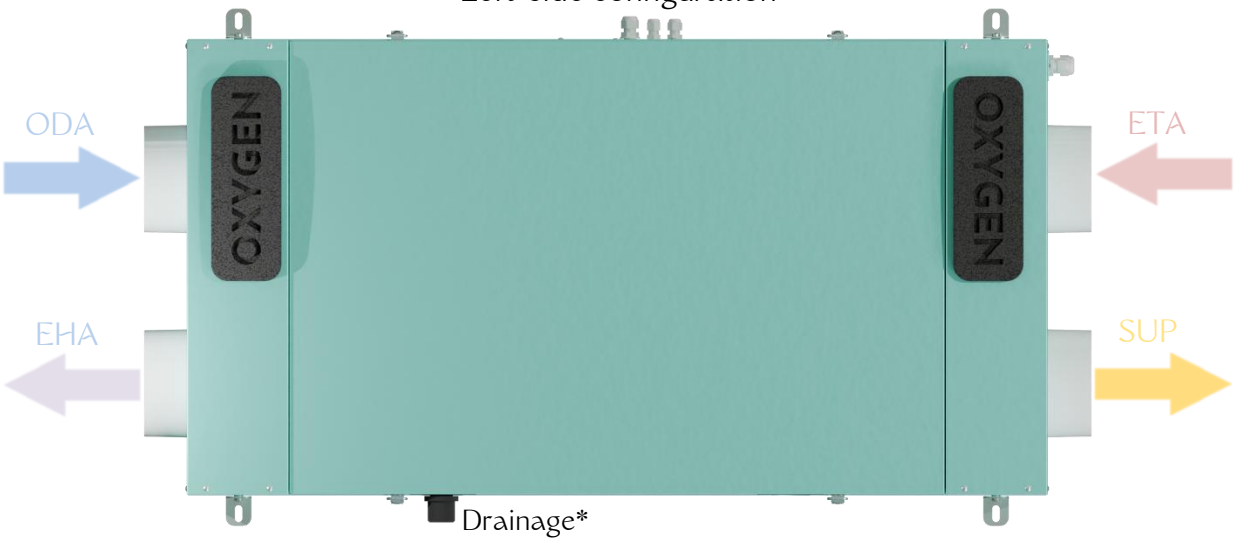

Right-side configuration

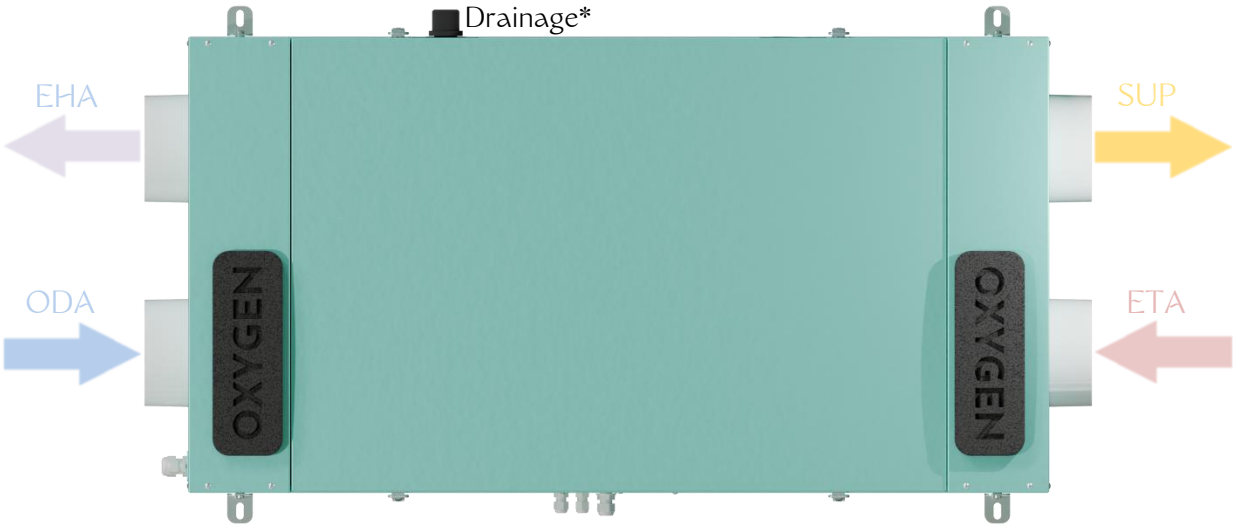

Abbreviation	Meaning
ODA	air supplied from the outside
SUP	air supplied to the premises
ETA	air extracted from the premises
EHA	air exhausted to the outside

6. Installation of the unit

When ordering the unit, always specify the correct orientation: left or right side. Check here: Orientation.

Environmental conditions: The unit is intended for installation only in heated indoor spaces (e.g., a utility room, hallway). The room temperature must not fall below **10 °C**, and the constant relative humidity must not exceed **60**%. It is strictly prohibited to install the unit outdoors or in unheated areas (e.g., an open garage). If the unit is installed in a bathroom, the requirements for electrical safety zones must be observed (install in a safe zone, away from water sources).

6.1. Installation Procedure

Preparing the mounting brackets: Four mounting brackets are included with the unit, which are screwed on all four sides (corners) of the device.

Vibration Insulation (MANDATORY): These brackets come without vibration insulation gaskets, but to avoid transmitting structural noise and motor vibration to ceiling structures, it is strongly recommended to use vibration-damping gaskets before attaching the device.

Device tilt angle: When using a spirit level, you must level the device depending on the type of heat exchanger included in its set:

- **With an enthalpy heat exchanger:** Must be installed perfectly horizontally, without any tilt angle.
- **With a standard heat exchanger:** Since these heat exchangers remove moisture from the home, the device must have a slope toward the drainage to allow condensate to flow smoothly.

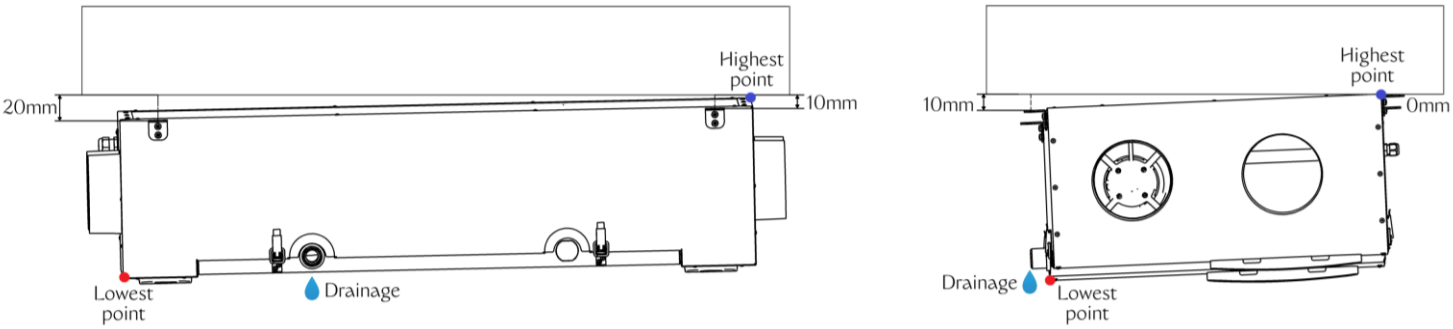

Recommended differences in mounting point heights for a standard heat exchanger:

- **Point 1** (where the drainage connection is): at least 20 mm below the reference point.
- **Point 2:** 10 mm lower.
- **Point 3:** 0 mm (highest reference point).
- **Point 4:** 10 mm lower.

Attention: if the unit with the standard heat exchanger is suspended unevenly (without the required slope), the condensate drainage system will not function properly, water will accumulate inside the device, and the electronics will be damaged. Such failures are not covered by the warranty.

Drilling and fastening: Measure and drill holes. Firmly screw the device to the structure using ceiling-appropriate screws and dowels (not included, selected by the installer according to the load-bearing capacity of the structure).

Noise suppressors: We recommend using so-called silencers both on the supply to the home and on the pipes taken out of the house. If non-standard pipes are used or recommendations are not followed, the manufacturer is not responsible for noise greater than declared.

6.2. Installation of Ducts and Outdoor Grilles

To ensure reliable and safe operation of the ventilation unit and to prevent damage caused by condensation, the ductwork system must be designed and installed in accordance with the requirements listed below. Failure to comply with these requirements directly jeopardizes the safety of the unit (potential electronic malfunctions, short circuits, or fire) and voids the manufacturer's warranty.

6.2.1. Condensate management and duct slopes

Temperature differences between outdoor and indoor air inevitably cause condensation to form inside the ducts. To protect the unit from flooding:

- **Required Slope:** All outdoor air intake and exhaust ducts must have a slope of at least 1° (approximately 2 cm per meter) directed toward the outside (downward from the unit). This ensures that any condensate that forms will safely drain outdoors rather than flowing back into the ventilation unit.
- **Prohibition on Direct Connection to Vertical Shafts:** It is strictly prohibited to connect the unit directly to vertical chimneys or shafts that do not have a condensate collection (trap) and drainage system. A direct vertical connection allows moisture and precipitation to flow freely directly into the unit.

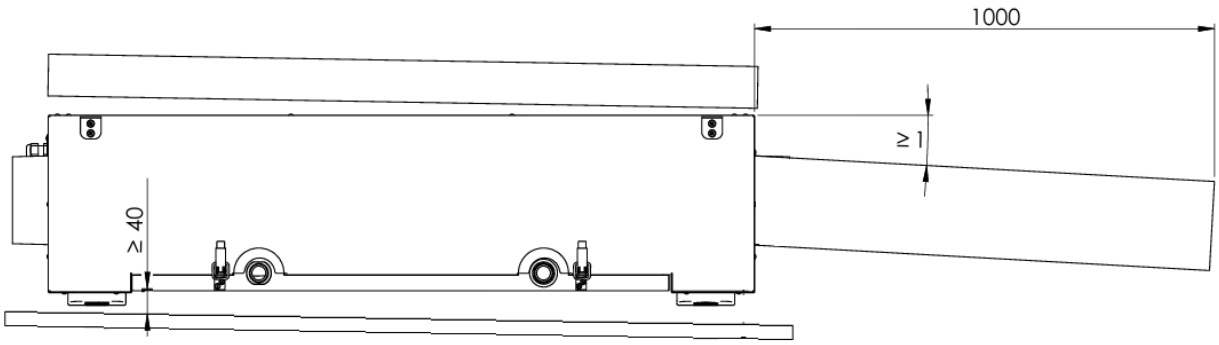

6.2.2. Duct Insulation and Airtightness

Uninsulated or improperly insulated ducts are the primary cause of moisture buildup, mold, and flooding of the unit's automatic controls.

- **Insulation layer:** Ducts that supply and exhaust outdoor air, as well as all ducts passing through unheated spaces, must be insulated. The recommended minimum insulation thickness is 50 mm of mineral wool with an outer layer of aluminum foil vapor barrier (or rubber insulation with equivalent resistance).
- **Restrictions on Metal Ducts:** It is strictly prohibited to use open, uninsulated metal ducts outdoors or in transitions between zones with different temperatures.
- **Insulation of Connections:** After connecting the ducts to the flanges of the ventilation unit, the connections themselves must be thoroughly insulated and sealed with special adhesive aluminum tape and thermal insulation. If a metal joint is left uninsulated, a thermal bridge will form near the unit, causing moisture from the room to condense on it, which may drip onto the unit's housing or control components.

6.2.3. Air Intake and Exhaust Vents

- Outdoor air intake and exhaust vents must be installed at a sufficient distance from one another to prevent contaminated exhaust air from being drawn back into the premises.
- The openings must be protected by canopies or special outdoor grilles to prevent rain or snow from entering the air ducts.
- **NOTE:** It is not recommended to use outdoor grilles with fine-mesh insect screens. The mesh quickly becomes clogged with dust, freezes in winter, and drastically reduces airflow. The filters in the ventilation unit itself serve to trap dust and insects.
- To reduce noise levels indoors, it is recommended to use sound attenuators installed on the supply and exhaust air flanges.

IMPORTANT: PROTECTION AGAINST HEADWIND (RISK OF MOTOR OVERHEATING)



Before installing the outdoor grilles, the installer must assess the building's location and prevailing wind conditions. In open areas and regions where strong headwinds occur (especially in coastal areas or on the upper floors of buildings), it is strictly prohibited to use standard flat grilles for the exhaust outlet.

Strong wind pressure blowing directly into the exhaust vent creates enormous resistance, causing the unit's fan to operate at maximum load. This inevitably leads to motor overheating and burnout. In such locations, it is mandatory to use special outdoor grilles with a deflector hood (canopy) that directs the exhaust airflow downward. Fan failures caused by wind-induced overload are not covered by the manufacturer's warranty.

IMPORTANT: DANGER TO THE DEVICE AND PROPERTY!



If condensation or precipitation enters the ventilation unit due to improper duct slope or poor insulation, water can flood the electric heater and electronic control boards. This poses a direct risk of short circuit and fire. Failures caused by moisture entering from the duct system are treated as consequences of improper installation and are not covered by the manufacturer's warranty.

6.3. Condensate drainage and siphon connection

During operation of the ventilation unit, condensate may form in the heat exchanger, which must be continuously and safely drained into the building's wastewater system. An improperly installed drainage system is the most common cause of unit flooding and malfunctions in the electronics and motors.

6.3.1. When is drainage required?

Standard heat exchangers: Connecting a drainage system is strictly required. A special drainage connection fitting is included with the unit and can be easily screwed into the bottom of the unit.

Enthalpy (moisture-recovery) heat exchangers: Although under standard conditions, enthalpy heat exchangers do not produce condensate and drainage is not required for them, exceptions apply to rooms where the constant relative humidity exceeds 65%. At such high humidity levels, even an enthalpy heat exchanger begins to condense. In this case, the user must purchase a drain connection fitting separately and install a drainage system.

6.3.2. Requirements for Installing the Drainage System

Unit tilt: If a standard heat exchanger is used, it is mandatory to maintain the unit tilt in the drainage direction (slope > 1°), as specified in the previous installation section and drawing. Without this tilt, condensate will not leak out of the unit bath.

The necessity of a dry-type trap: A dry-type trap (with a ball or membrane mechanism) must be installed between the device and the sewage pipeline. When the device operates, negative pressure (vacuum) forms inside it. If the pipe is connected directly, without a dry siphon, the vacuum will draw air through the drainage pipe inside and prevent condensation from flowing out.

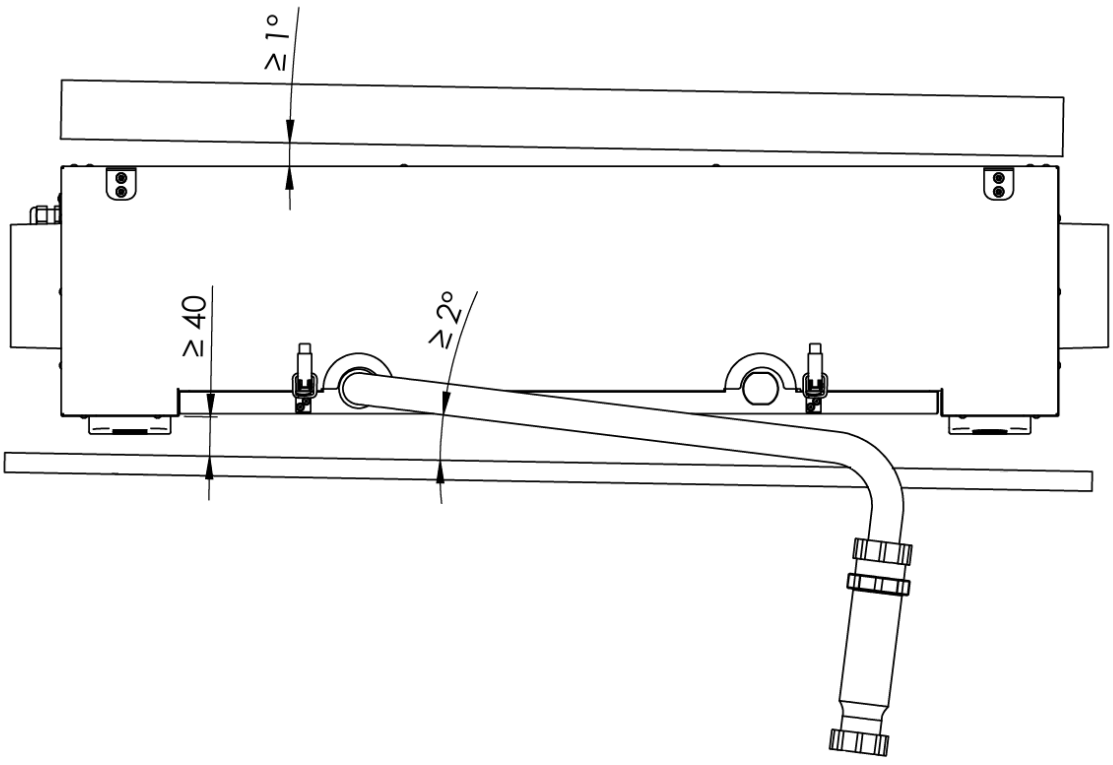

Pipeline slope: The entire condensate drainage pipeline from the siphon to the sewage must have a downward slope of at least 2°. The pipe must not be completely horizontal, and it must not have "loops" or bends where water could accumulate.

Frost protection: If the drainage pipe is laid through unheated rooms, it must be insulated with heat-retaining material or heated cable to prevent condensation from freezing inside the pipe.

System testing: After completing the installation work, the installer must pour a small amount of water into the unit's condensate tray and ensure that water flows smoothly through the siphon.

6.3.3. Maintenance

Annual Inspection: The dry trap must be inspected before each winter season. The user or service technician must ensure that the trap's internal mechanism is not dirty, stuck, or jammed in the open or closed position.

IMPORTANT: WARRANTY AND LIMITATION OF LIABILITY!



If the drainage system is installed improperly (no dry trap used, insufficient slope, frozen piping) and the resulting water accumulation damages the fan, the control system, or causes water to leak through the unit's housing and damage the interior finish, then this is considered an installation error. The unit's warranty does not cover such malfunctions, and the manufacturer assumes no liability for any property damage incurred.

7. Maintenance and service area

To ensure the smooth operation of the ventilation unit, timely filter replacement, and technical maintenance, it is mandatory to leave sufficient free space during installation. Failure to comply with these requirements directly limits warranty service options and may result in additional costs for the user.

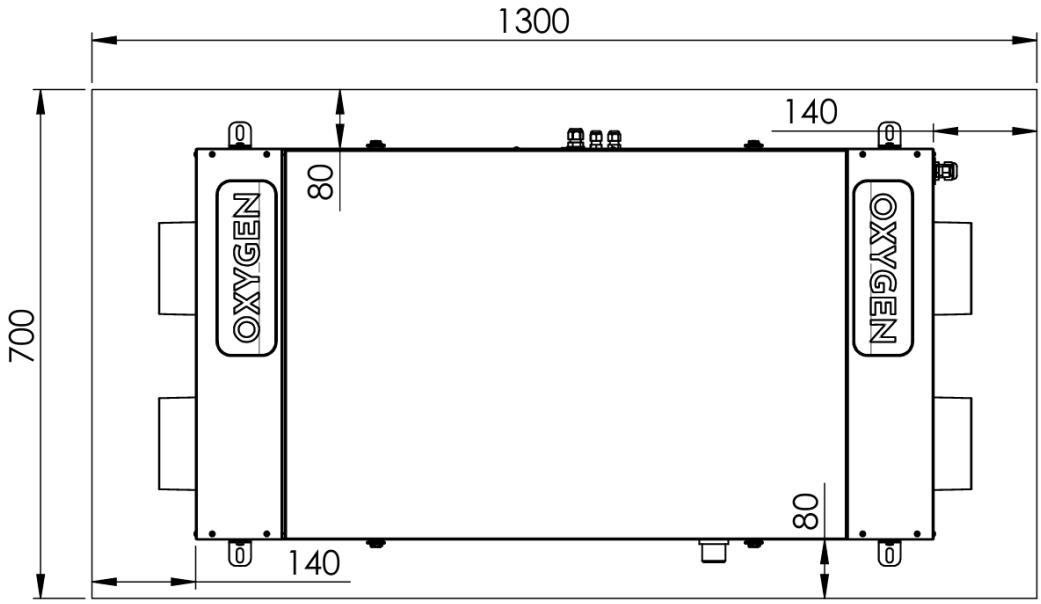

- **Service hatch (installed under suspended ceilings):** Since the unit is usually mounted to the ceiling and hidden under drywall or other suspended structures, it **is strictly mandatory** to install an opening service hatch.
- **Required dimensions and free space:** According to the manufacturer's drawing, the free space (hatch) around the device must be at least **1300 mm x 700 mm**. The following minimum distances from the device housing to obstacles must be maintained:
    - From the rear parts (where duct connections are located) – **at least 140 mm each**.
    - From the side parts – **at least 80 mm each**. This space is critically important for freely removing the lower cover of the unit, pulling out the heat exchanger for washing, replacing air filters, or accessing automation and heating elements from all sides.
- **Prohibition of Obstructions:** No foreign objects, pipelines, electrical cables, or ceiling frame profiles blocking cover removal or filter replacement may be present in the space under the unit and at the specified distances around it.
- **Responsibility for ceiling dismantling:** It is strictly prohibited to permanently enclose the unit within ceiling structures without providing an inspection hatch. The user must ensure unobstructed access for maintenance and servicing without the need to dismantle any building or finishing materials..



- **Attention:** Service personnel will not dismantle or remove interior finishes or drywall ceilings, and the manufacturer accepts no liability for any potential damage to them.
- If a technician arrives on-site and determines that a proper access panel is not provided, requiring the dismantling of structures to reach the unit, the manufacturer's representative reserves the right to refuse warranty service. In such an event, the user must remove the obstructing structures at their own expense and responsibility, and will be required to cover the technician's call-out fee.

- **Installation height and safe access:** It is recommended to install the device at a height that allows comfortable and safe access using standard small household ladders. If the device is installed at a very high or hard-to-reach location, the user must ensure safe access in advance (with appropriate ladders or scaffolding) and provide it to the maintenance personnel.



IMPORTANT: WARRANTY CONDITIONS AND FILTER REPLACEMENT If the user cannot regularly and timely replace the air filters due to an unsecured service hatch or a "sealed" device, the device's operation is considered irregular. Failures caused by untimely or clogged filters (e.g., fan overheating, heating element burnout) are treated as consequences of improper maintenance and are not covered by the manufacturer's warranty.

8. Balancing the Ventilation System

During the installation and commissioning of the ventilation system, it is mandatory to precisely balance the supply and exhaust airflows. Only a properly balanced system will ensure optimal heat recovery (heat recovery rate), electricity consumption, and long-term operation of the unit.

Risks of operating an unbalanced system:

- **Heat exchanger freezing and damage:** During the cold season, an imbalance in airflows poses a direct risk of the heat exchanger freezing. Frozen condensate can expand and irreversibly damage the heat exchanger's structure and the unit's internal airtightness.
- **Vacuum (negative pressure) in rooms:** If the exhaust airflow exceeds the supply airflow, negative pressure builds up inside the home. This makes doors difficult to close and can draw unwanted odors and hazardous gases into living spaces from chimneys, fireplaces, or sewer systems.
- **Overpressure in rooms:** If the supply airflow is too high, positive pressure builds up in the rooms. Warm, humid indoor air is forced into the building's structures (walls, roof), where it cools and turns into condensation, posing a risk of mold and rot.
- **Drastic drop in efficiency:** Unbalanced airflows disrupt the heat exchanger's operation, causing the unit to fail to recover heat efficiently and resulting in unheated, cold air being supplied to the rooms. This significantly increases heating costs.

IMPORTANT: WARRANTY TERMS



System balancing must be performed exclusively by a qualified specialist using calibrated measuring equipment (anemometers, barometers). After completing the balancing work, the specialist must fill out and sign the ventilation system commissioning and adjustment report.

Malfunctions (e.g., a failed heat exchanger) resulting from the system being operated in an unbalanced state are considered a consequence of improper installation. If a completed commissioning and adjustment report is not submitted, the manufacturer's warranty for the unit will not apply.

9. Electrical Connection



- Before performing any installation, maintenance, or electrical work, **be sure to disconnect the unit from the electrical supply**. Unplug the power cord from the outlet or, if there is no outlet, disconnect the unit via the circuit breaker (automatic switch).
- Ensure that the unit **cannot be accidentally turned back on by third parties:** use a warning sign or other safety measures.
- **All electrical installation work must be performed only by a qualified electrician** authorized to perform such work in accordance with applicable laws and regulations.

9.1. Electrical installation requirements

- **Power Supply:** The unit is designed to be connected to a single-phase alternating current power supply of ~230 V, 50 Hz.
- **Overload protection (IMPORTANT):** Since C series devices use a resistive heating element, the maximum current used by the device does not exceed 6 A. To ensure maximum equipment and building safety, it **is strictly mandatory** to install **a 10 A, B characteristic (B10)** circuit breaker in the electrical panel for this device . The use of C characteristic or higher rating (e.g., 16 A) circuit breakers does not ensure the required rapid activation and is prohibited.
- **Leakage current relay:** To protect human life and equipment, the electrical panel **must** be equipped with a type A leakage current relay (RCD) with a sensitivity not exceeding 30 mA.
- **Separate line:** The ventilation unit **must have** a separate power line connected from the main electrical distribution board. It is strictly forbidden to connect the unit to common groups of room sockets or to load the line with other household appliances.

9.2. Connecting the device to the network

- **Factory cable:** The device is supplied with a factory-connected 3-wire 3x1.5mm² power cord and plug. It is strictly forbidden to modify, short, or disassemble the factory power cord yourself.
- **Electrical outlet requirements:** The device's plug must be plugged directly into a permanent, neat, and grounded wall electrical outlet. The use of extension cords, hubs, or adapters is strictly prohibited. Failure to comply with this requirement poses an immediate fire hazard and is not covered by warranty for the equipment.

9.3. Emergency disconnection and maintenance

- **Access to the electrical outlet:** Since the device does not have a separate service switch, the emergency disconnection function is performed by the power plug. The wall electrical outlet must be installed in an easily and quickly accessible location near the device. It must not be blocked by furniture, other devices, or stored items.

Access to the electrical panel: The electrical distribution panel, equipped with the B10 automatic circuit breaker and residual current relay designed for this device, must always be unobstructed and easily accessible. It is strictly forbidden to block access to the panel with stored goods, furniture, or other structures. The user must know which circuit breaker in the panel belongs to the ventilation unit in order to immediately cut off power in case of danger.

10.Technical specifications of the controller and remote control

Table 2

Control Unit			
Power Supply	230 VAC, 50 Hz		
Current consumption	0.04 A		
Max. rated current	OUT1	3(3) A	230 V
	OUT2	3(3) A	
	OUT3A	3(3) A	
	OUT3B	3(3) A	
	OUT3C	3(3) A	
	OUT-230 V	6(6) A	
Ambient temperature	0…50°C		
Storage temperature	-25…+60°C		
Relative humidity	5…85% without condensation		
CT10 (NTC 10K) sensor temperature measurement range / accuracy	-40…+60°C/ ±2°C		
Connector wire gauge	0.5…2.5 mm²		
Clamping force	0.4 Nm		
Panel dimensions	150 × 117 × 50 mm		
eV-Ex04 module dimensions	70 × 90 × 40 mm		
Standards	EN 60730-2-9 EN 60730-1		
Software class	A, EN 60730-1		
Protection class	Suitable for installation in Class 1 equipment		
Overvoltage protection	2500 V		
Protection class (IP)	IP 00		
"EASY" Wired Remote Control			
Power Supply	5…12 VDC		
Current consumption	0.24 W (max. 1.7 W)		
Data Transmission	-RS485 (Modbus RTU protocol) with the main controller -Wi-Fi B/G/N standard with ecoNET CLOUD -Bluetooth v4.2 with mobile app		
Operating conditions	0…40 °C, 5…85 % RH (non-condensing), indoor environments with low dust levels		
Connection	Self-locking connector. Wire cross-section 0.25…1.5 mm²		
Protection class	IP 20		
Storage temperature	0…65°C		
Temperature measurement range / Accuracy	5…35 °C / ±0.5 °C		
Temperature hysteresis	0.2…5 °C		
Dimensions	80 × 80 × 10 mm		
Installation	Wall-mounted		

11.Electrical wiring diagram

Wire color coding (according to IEC 60757).

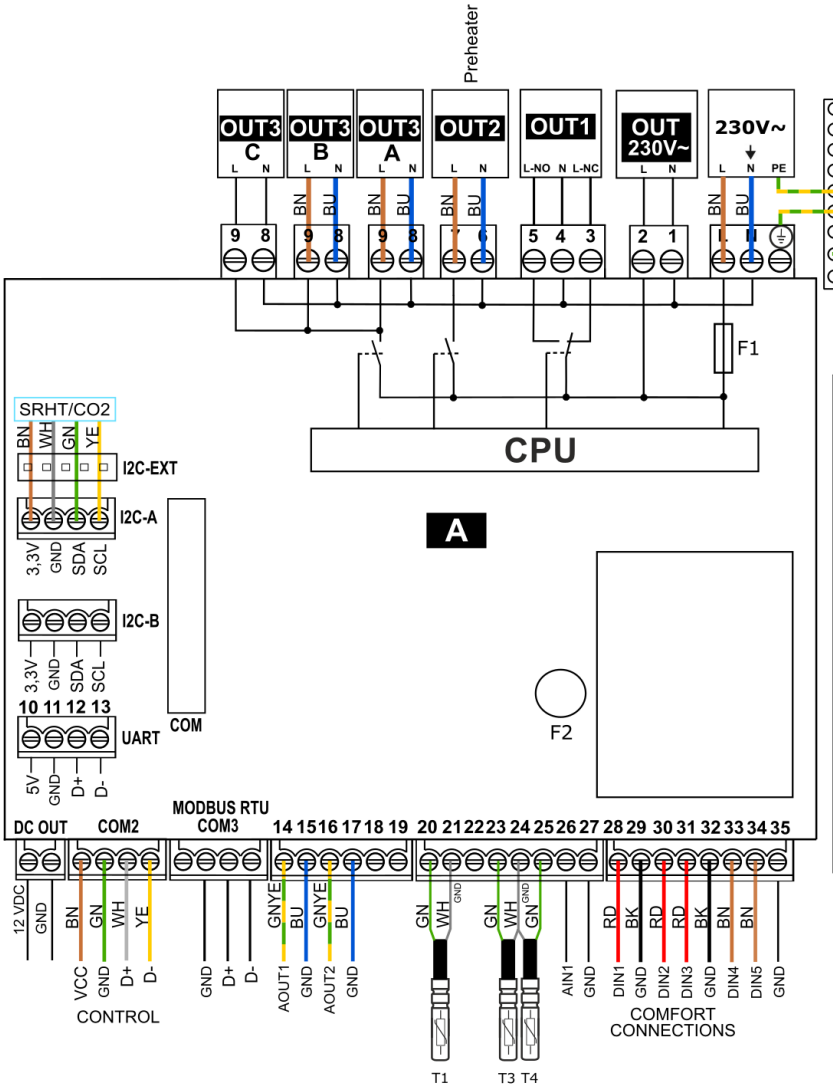

IEC 60757 Wire Colour Codes	
Black	BK
Brown	BN
Red	RD
Orange	OG
Yellow	YE
Green	GN
Light blue	BU
Dark blue	DBU
Violet	VT
Gray	GY
White	WH
Pink	PK
Turquoise	TQ
Green / Yellow	GNYE

11.1. Contact tracing

Resistive inputs (NTC 10 K):
T1 – air supply sensor to the premises;
T2 – comfort heater control sensor (Not included, installed separately);
T3 – outdoor air temperature sensor (required);
T4 – outdoor air temperature sensor (required);

Analog outputs (0-10 VDC):
AOUT1 – supply air fan;
AOUT2 – exhaust air fan;

Analog outputs (0-10 VDC or PWM):
AOUT3 / PWM – comfort heater control via semiconductor relay (SSR); SSR – solid state relay;

Analog input (0 - 10 VDC):
AIN1 – analog CO2 sensor

Digital inputs (additional device connections, comfort features):
DIN1 – Available options are listed DIN Comfort Connector section;
DIN2 – Available options are listed DIN Comfort Connector section;
DIN3 – Available options are listed DIN Comfort Connector section;

Voltage outputs:
OUT 230 V ~ – unregulated AC output;
DC OUT – 24 VDC unregulated DC output;

Relay outputs (for device control):
OUT1 – control of external dampers;
OUT2 – comfort heater;
OUT3A… OUT3C – supply and exhaust air fans and ionizer;

Data communication buses:
COM – Bypass module;
UART – RS232 data bus – not in use;
COM2 – remote control (12 VDC supply voltage);
COM – slot for expansion module B;
I2C-A – SRHT IN1 differential pressure sensor or SCO2 IN1 air quality sensor, or humidity sensor;
I2C-B – SRHT IN1 differential pressure sensor or SCO2 IN1 air quality sensor or humidity sensor;
I2C-EXT – parallel data transmission with I2C-A and I2C-B;
CPU – controller;

Fuses:
F1 – power supply circuit fuse, T6.3 A / 250 VAC;
F2 – TR5 fuse, 630 mA / 250 VAC;

Power supply:
L, N, PE – 230 V ~ – controller power supply;
PE – grounding

11.2. Preparing cables for connection to contacts

Insulated tips must be used for multi-part (flexible) cables.

This ensures a reliable and secure contact when connecting wires to terminals.

- The insulated tip must be properly clamped onto the wires.
- Do not use uninsulated tips or bare wire ends without the tip.

Screw tightening torque: 1.2 Nm

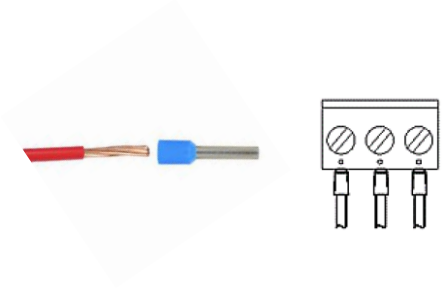

12. Replacing Fuses

DANGER: RISK OF ELECTRIC SHOCK! Before opening the unit's cover and performing any fuse replacement work, you must disconnect the unit from the electrical supply (unplug the power cord from the outlet or turn off the circuit breaker in the electrical panel).

12.1. Main fuse F1:

- **Specifications:** Only use 250 V AC, ceramic, time-delay (inert, marked with the letter "T") fuses, size: 5 × 20 mm.
- **Rating:** The standard current rating for the main F1 fuse is 6.3 A (marked T6.3A). (Note: If the unit has additional output circuits, their fuses are selected based on the connected load; the standard rating is 3.15 A. Always use only a 6.3 A fuse for the main F1 socket.)

Procedure for replacing the F1 fuse:

1. After ensuring that the unit is disconnected from the power supply, gently lift the fuse holder cover with a flathead screwdriver (as shown in the illustration).
2. Remove the blown fuse from the holder.
3. Insert a new fuse with the correct specifications and secure the holder.

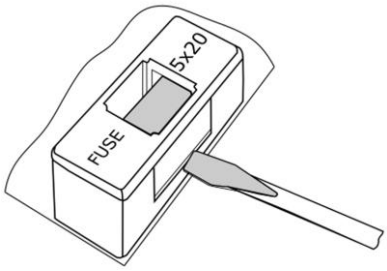

12.2. Additional F2 fuse:

- **Specification:** The unit uses an additional fuse F2. If this fuse blows, you must replace it with a component of exactly the same specifications: a miniature, slow-blow 630 mA / 250 V AC, TR5-type fuse compliant with the IEC 60127 standard (e.g., manufactured by Schurter).
- **Warranty Terms:** It is strictly prohibited to use fast-blowing fuses with different specifications or any homemade short-circuit devices. Using an inappropriate fuse does not ensure the necessary protection of the electronics and may result in irreparable damage to the control board or even pose a fire hazard. The manufacturer's warranty does not cover failures resulting from the use of fuses with incorrect ratings. It is recommended that the replacement of fuse F2 be performed by a qualified service technician.



13.Selecting the device control panel cable and installing the panel

The remote control is intended for installation only on a wall in a dry room.

The panel must not be used if there is a risk of water vapor condensation or if it may be exposed to water.

Installation must be carried out according to the following instructions:

1. Remove the mounting frame from the rear panel housing.
   The frame is attached to the panel body with locks. A flat screwdriver can be used for removal.

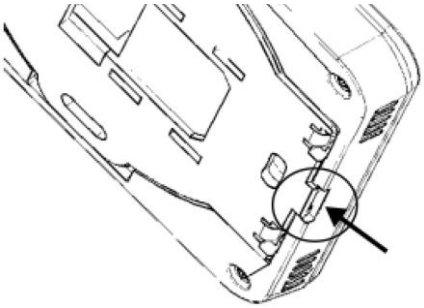

2. Connect the transfer cable wires connecting the remote to the controller to the automatically snapping remote terminals.

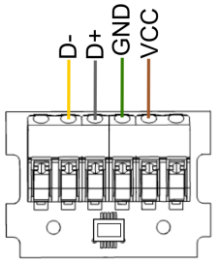

VCC – Brown
GND – Green
D+ – Gray
D- – Yellow

3. The cable connecting the remote control to the controller must be concealed within the wall.
   This cable **must not be routed alongside the building's electrical wiring, nor should it be near devices that emit strong electromagnetic fields**.

4. Drill holes in the wall and secure the mounting frame with screws at the chosen location. Correct position (marked "UP") must be followed during installation.

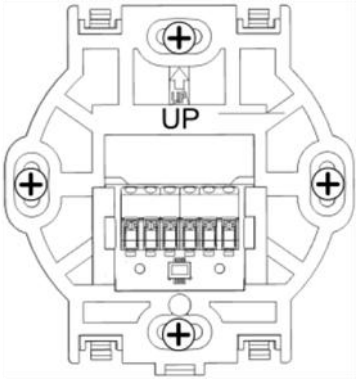

5. Then attach the panel to the mounting frame by pressing until it locks with the locks

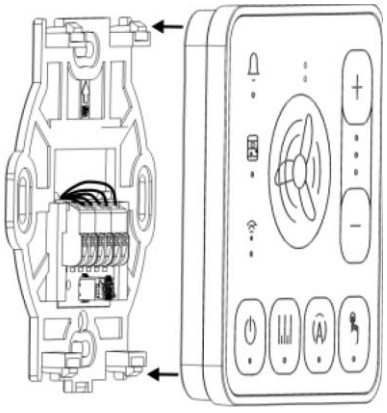

The device comes with a 10-meter LIYY 4x0.14 mm² remote control cable. If you need a longer cable or want to route the cable before purchasing the device, we recommend:

- Use a similar type of cable, e.g., LIYY 4x0.14 mm², if the cable length does not exceed 15–20 meters.
- If a longer length (more than 20 meters) is required, use a cable with a larger cross-section, e.g., LIYY 4x0.25 mm², to reduce voltage drop.
- If the cable is laid near strong electromagnetic interference sources (e.g., electrical cables), we recommend choosing shielded cables, such as LIYCY 4x0.14 mm² or 4x0.25 mm², ensuring proper screen grounding.

Note that using longer cables may require checking signal quality and making corrections if necessary.

If you have any questions or need help choosing a cable, we warmly invite you to contact us help@oxygen.lt.

IMPORTANT: WARRANTY TERMS



1. **Control Panel Installation:** The remote panel must be mounted only on a completely flat surface. It is strictly prohibited to install the remote control in a way (e.g., on a mounting box of the wrong size or an uneven wall) that would cause its backplate to deform or bend. Bending of the plastic causes poor contact between the connections, which can lead to sparking and irreparably damage the control panel's electronics. The warranty does not cover defects caused by mechanical deformation during installation. When routing the unit's control cable, the unit must be disconnected from the power supply and must not be turned on until the control panel is connected; loose wires may come into contact and cause a short circuit

2. **Cable Connection:** When routing and connecting the control panel cable, the ventilation unit must be completely disconnected from the electrical grid. It is strictly prohibited to connect the unit to the power supply until the control panel is fully and correctly connected. If the system is turned on with unconnected (loose) cable ends, the wires may come into contact and cause a short circuit. Although the control board is equipped with protection, a short circuit will blow a special internal fuse, which will need to be replaced. Replacing fuses due to a short circuit caused during installation is not covered under warranty.

14. DIN Comfort Connector

The contacts of additional devices and switches connected to the DIN connector must be potential-free (a voltage-free short circuit, known as a “dry contact”), i.e., they must not carry any voltage either when activated or deactivated

14.1. Digital input contacts in C series models



Function	What it does
BOOST1	This function has two operating modes: **Closed:** based on the set logical contact state **NO/NC**, the unit increases the airflow to the set value (factory setting is 100 %) and returns to the previous operating mode when the contact is deactivated. **Signal:** based on the set logical contact state **NO/NC**, the unit increases the airflow to the set value (factory setting is 100 %). When the contact is deactivated, a timer is activated; after a set period, the unit automatically returns to its previous operating mode.
BOOST2	**BOOST2** is identical to **BOOST1**.
FAS (Fire Alarm System)	This function is activated only by a **NC** contact. Deactivating this contact stops the unit‘s operation to ensure safety in the event of a fire.
Alarm Control Panel	This function has two operating modes: **Speed adjustment function:** reduces the unit‘s fan speeds to 25% or increases them to 100% **Unit shutdown:** completely shuts down the unit. It is also possible to activate the “Ventilation” function, which turns on ventilation with the selected settings for a set period of time, regardless of whether the unit is ON or OFF.
Relative Humidity Sensor	If an external humidity sensor that provides an **NO/NC** signal is used, it can increase the airflow for up to 90%.
CO_2 sensor	If an external CO_2 sensor is used that provides a **NO/NC** signal, it can increase the ventilation airflow for up to 90%.

15. Startup, Inspection, and Operation of the Unit

Before turning on the unit, make sure there are no foreign objects, debris, or tools left inside it. Check that the air filters are installed, that the condensate drain is connected (if required), and that the unit's control panel is connected. Also, check the duct system for any unnecessary obstructions, such as closed diffusers or control dampers, clogged outdoor air intake grilles.

The ventilation unit must be equipped with one of the following control panels:

1. **Easy control panel** with touch-sensitive buttons that allow you to select the main ventilation modes and settings.
2. **LCD SimpleTouch control panel** featuring a color touchscreen that allows you to view and adjust the unit's functions and settings.

The unit can be controlled in the following ways:

1. Using a control panel
2. Using the **OXYGEN Easy** app
3. Using the web application: easy.oxygenvent.com.

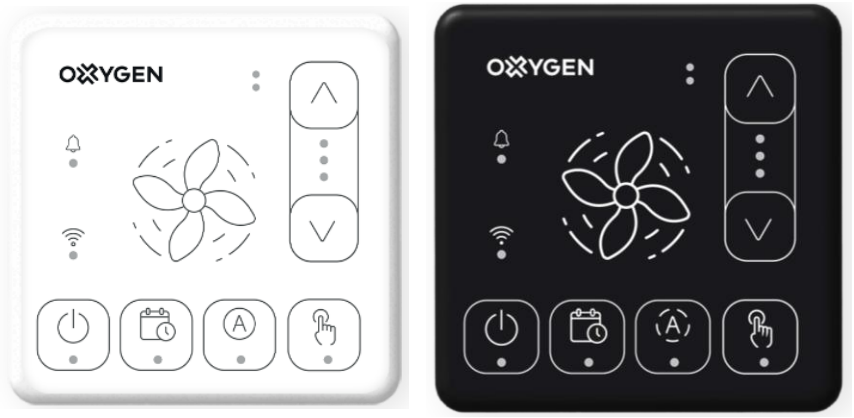

Easy control panel



LCD SimpleTouch control panel

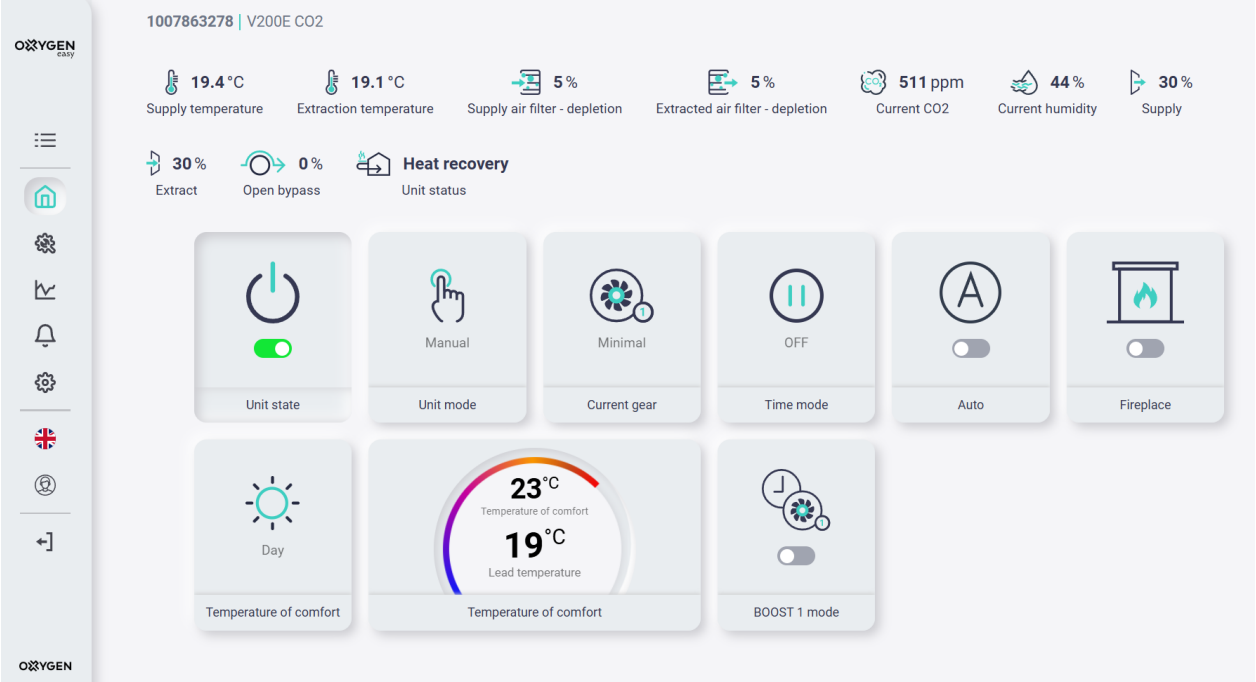

OXYGEN Easy website

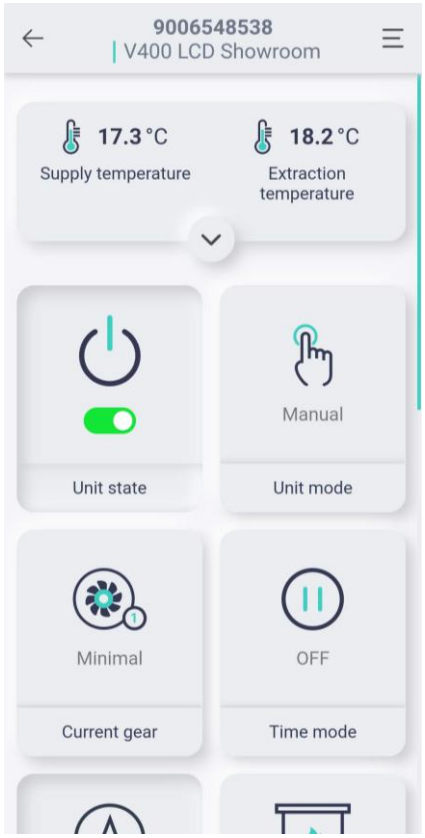

OXYGEN Easy app

15.1. Easy Control Panel

The Easy control panel can be used to control basic ventilation modes and settings.

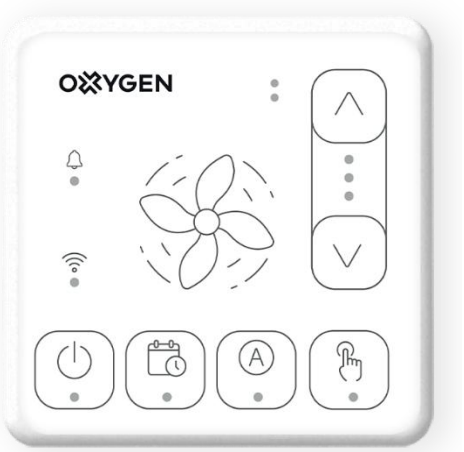

To control the unit, press the button for the desired function. The meanings of the button symbols and the functions of the LED indicators are explained below:



- **Steady indicator** indicates that the unit is turned on



- **Weekly operating mode:**
  When the **indicator is steady**, the unit is operating according to the set weekly schedule. If the schedule is inactive or not set, the **indicator blinks**. When weekly mode is enabled, the manual control indicator turns OFF, and vice versa.



- **Automatic control:**
  The unit can operate based on data from humidity and CO_2 (if installed) sensors. When the levels of these parameters change, the ventilation speed is gradually increased until the set limits are reached.



- **Manual mode:**
  The unit operates at a preset fan speed. This mode allows the user to directly adjust the airflow.

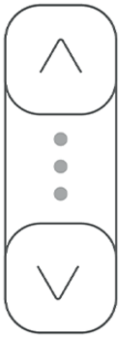

- **Fan speed control:**
  Works only when manual mode is enabled. Default settings based on indicators:
  3 indicators: 70%
  2 indicators: 50%
  1 indicator: 30%



- **Malfunction indicator:**
  Warns about unit malfunctions (check the OXYGEN Easy app or web application for more information regarding the exact malfunction).



- **Connection indicators:**
  Rapid blinking: Bluetooth is active
  Steady: Wi-Fi is active
  Slow blinking: connection to Wi-Fi failed

15.2. OXYGEN Easy app

All OXYGEN control panels feature built-in Wi-Fi connectivity that allows monitoring and controlling of the unit remotely. The web app can be accessed by scanning the QR code or by visiting: easy.oxygenvent.com

How to get started?

The latest unit pairing instructions can be accessed by scanning the QR code or by visiting: youtube.com/@oxygenvent

Essential network requirements:

Wi-Fi frequency: The control panel's communication module **only** supports **2.4 GHz** Wi-Fi networks.
Network strength: The Wi-Fi signal at the location where the control panel is installed must be a stable and sufficiently strong. If the control panel is installed in a metal cabinet, a basement with thick walls, or an attic where the signal does not reach, you may need to use a Wi-Fi signal repeater. The user is responsible for ensuring an adequate Wi-Fi coverage area.

IMPORTANT:

The manufacturer is not liable for connection issues caused by problems with the user's internet service provider, router settings, or a weak Wi-Fi signal at the control panel's installation location.

15.3. Upgrading to LCD SimpleTouch control panel

Before connecting the LCD SimpleTouch remote control, the unit‘s software version must be checked:

Connect the unit to Wi-Fi: Make sure your unit is successfully paired and accessible via the OXYGEN Easy app.

Contact OXYGEN: Email the technical support department at help@oxygen.lt. Our service department will remotely check your unit‘s software version and if necessary, update it free of charge.

IMPORTANT: SOFTWARE COMPATIBILITY

If the LCD SimpleTouch control panel is connected without first performing a software version check and contacting the technical support department, it may not work.

In this case, a manual LCD SimpleTouch control panel software update may be needed. Please note that this is not covered under warranty.

16. Unit Maintenance

To ensure the unit operates properly and efficiently, regular maintenance is required

16.1. Filter Replacement

The filters in the ventilation unit must be replaced regularly. The user is notified of the need to replace the filters via the OXYGEN Easy app or the fault indicator on the control panel.

- **Critically exceeded filter replacement interval:** The unit automatically switches to emergency mode (**manual speed adjustments are ignored and fan speed is set to 100%**) to ensure a minimum safe airflow. **After filter replacement and resetting the timer, the unit returns to normal operation.**

DANGER: SIGNS OF IMPROPER INSTALLATION!

During filter replacement, they must be carefully inspected for any signs of ice buildup or moisture. If ice or water are detected on the filters or inside the unit, the unit must be immediately disconnected from the electric grid.

Moisture on the filters may indicate improper system installation, such as inadequate duct insulation or an incorrect slope. In such cases, the specialist responsible for the system installation must be contacted to identify and rectify the installation defects.

16.1.1. Resetting the Filter Timer Using the Control Panel

1. Turn off the ventilation unit by pressing power button and replace the filters.
2. Turn the unit back on by pressing power button
3. Press and hold calendar and auto mode symbols simultaneously for 5 seconds.
4. After 5 seconds, the calendar and auto mode symbols indicators will blink and bell symbol will turn OFF, the unit will return to normal mode.

16.1.2. Resetting the filter timer using the OXYGEN Easy app

The latest unit pairing instructions can be accessed by scanning the QR code or by visiting: youtube.com/@oxygenvent

16.1.3. Filter classes:

Filter class by EN 779:2012	Filter class by ISO 16890	Particle size	Percentage of particles removed by the filter	Examples of solid particle sizes
G4	ISO coarse	>10 µm	> 60%	Pollen: 10 – 100 µm Household dust: 1 – 100 µm Mold spores: 8 – 80 µm Wood smoke: 0.006 – 10 µm Animal dander: 0.1 – 25 µm Dust mite allergens: 0.2 – 25 µm Bacteria: 0.5 – 10 µm Viruses: 0.005 – 0.3 µm Soot: 0.01 – 0.3 µm Tobacco smoke: 0.01 – 1 µm
		<10 µm	<50%	
M5	ISO ePM10	0.3 - 10 µm	≥ 50%	
	ISO ePM2.5	0.3 - 2.5 µm	10 – 45%	
	ISO ePM1	0.3 – 1 µm	5 – 35%	
F7	ISO ePM10	0.3 - 10 µm	80 – 90%	
	ISO ePM2.5	0.3 - 2.5 µm	> 70%	
	ISO ePM1	0.3 – 1 µm	50 – 75%	

16.2. Heat Exchanger Cleaning

The unit's heat exchanger must be cleaned at least once a year.

Cleaning procedure and requirements:

1. **Removal:** Unplug the unit from the power grid and carefully remove the heat exchanger
2. **Soaking:** Submerge the heat exchanger in lukewarm water. A small amount of mild, non-corrosive liquid soap or dish soap may be added to the water.
3. **Prohibited Substances:** It is strictly prohibited to use any aggressive chemical cleaners, acids (e.g., vinegar), alkalis (e.g., baking soda), or solvents. These substances can irreversibly damage the heat exchanger plates or the polymer membrane (if a moisture-recovery enthalpy heat exchanger is used).
4. **Rinsing:** Gently rinse the heat exchanger using a gentle stream of water.

DANGER: PHYSICAL DAMAGE TO THE HEAT EXCHANGER!

- **No high pressure:** It is strictly prohibited to use high-pressure washers (e.g., "Karcher") or compressed air. A stream that is too strong will deform and tear the heat exchanger's structure.
- **No mechanical cleaning:** The heat exchanger plates and, in particular, the enthalpy membranes must not be scrubbed with brushes or sponges. Cleaning must be performed using only water.

The manufacturer's warranty does not cover mechanical damage to the heat exchanger.

5. **Drying:** After rinsing, place the heat exchanger at an angle in a well-ventilated area until all the water has drained out and it is completely dry. It is strictly prohibited to dry it directly on hot radiators or using hot-air blowers. Only a heat exchanger that has dried completely may be reinstalled in the unit.

17. Quality Assurance

We strive to ensure that our documentation is accurate and clear. If you notice any errors or inconsistencies, please let us know by: help@oxygen.lt

Your feedback is extremely valuable, as it helps us continuously improve our work and provide higher-quality products and services.

Thank you for your help!

18. Technical specification according to "ECODESIGN" (ERP), NO. 1254/2014

Product model	Easy C150	Easy C150E	Easy C200	Easy C200E	Easy C250 V2	Easy C250E V2
Brand	OXYGEN					
Specific Energy Consumption (SEC), SEC class	A+	A+	A+	A	A	A
Cold climate (kWh/m2/a)	-83,4	-87,8	-81,6	-77,3	-79,1	-76,7
Average climate (kWh/m2/year)	-43,3	-43,3	-42	-39,6	-40,3	-38,9
Warm climate (kWh/m2/a)	-17,7	-17,9	-16,8	-15,4	-15,4	-14,7
Type of ventilation unit	Ventilation unit with heat recovery					
Fan	Variable speed EC fan					
Type of heat exchanger	[1]CF	[2]CFE	[1]CF	[2]CFE	[1]CF	[2]CFE
Thermal efficiency	93%	87,9%	90%	80,8%	86,7%	81,9%
Maximum airflow (m3/h)	143	143	200	200	251,5	240
Electric input power of the fan drive at maximum flow (W)	76	76	110	110	146,4	144
Sound Power Level (LWA)	49	49	49	49	48,2	48,2
Reference flow (m3/s)	0,028	0,028	0,039	0,039	0,049	0,046
Reference pressure difference, (Pa)	50					
Specific input power (SPI), W/(m3/h)	0,29	0,24	0,34	0,38	0,42	0,43
Controller factor	0.65					
Control typology	Clock control					
Leakage rate*						
internal	1,4%	1,4%	1,4%	1,4%	0,2%	2,2%
external	2,5%	2,5%	2,5%	2,5%	1,67%	2,07%
Warning about replacing a contaminated filter	Variants are described in the user manual					
Internet address where disassembly instructions can be found	www.oxygen.lt					
Annual electricity consumption (AEC) in the temperate climate zone, kWh/100m2.a	198	172	223	245	266	273
Annual Amount of Saved Heating Energy (AHS)						
Cold climate, kWh/100m2.a	9303	9096	9182	8809	9048	8817
Average climate, kWh/100m2.a	4756	4650	4693	4503	4625	4507
Warm climate, kWh/100m2.a	2150	2103	2122	2036	2091	2038
Bypass valve	None					

[1]CF – counter flow

[2]CFE – counter flow, enthalpic

19. Declaration of Conformity

UAB "OXYGEN group"
2 Lyderystės St. - D3, Biruliškės, Kaunas District
LT-54469 Kaunas
LITHUANIA

certifies that the ventilation units with heat recovery listed below:

OXYGEN Easy C150
OXYGEN Easy C150E
OXYGEN Easy C200
OXYGEN Easy C200E
OXYGEN Easy C250 V2
OXYGEN Easy C250E V2

complies with the requirements of the following European Community directives and standards:

2009/125/EC – Ecodesign Directive
EU 1253/2014
EU 1254/2014
EU 2017/1369
LST EN 13141-7:2021

2010/30/EU – Energy Labeling Directive
EU 1254/2014
2011/65/EU – Directive on the Restriction of the Use of Certain Hazardous Substances in Electrical and Electronic Equipment
(RoHS)
EN 50581(2012)
2014/35/EU – Electrical Equipment Safety Directive
EN 60335-1:2012
EN 60335-1:2012/A11:2014

Director
Mindaugas Povilaitis
May 27, 2026, Kaunas